IEEE

Celebrating 125 Years
of Engineering the Future

IEEM 2009

8 to 11 December, Hong Kong

www.ieem.org

The IEEE International Conference on
Industrial Engineering and Engineering Management

Organised by:

IEEE Technology Management Council
Singapore Chapter

IEEE Singapore Section

IEEE Technology Management Council
Hong Kong Chapter

Poster Session 3

12/11/2009 10:30 - 11:00
Room: Longchamps I & II

p.123 **Kinematic Analysis and Post-Processing Algorithm Research for 5-Axis CNC Machine Tools with a Universal Head**
Chun Xie[1], Weimin Zhang[1], Xinyuan He[2]
[1]*Tongji University, China*
[2]*Shenyang Machine Tool (Group) CO., LTD, China*

p.123 **The Simulation of Cutting Force of Free-form Surface Machining with Ball-end Milling Cutter**
Lei Shi[1], En Fu Liu[2], Yi Zhang[1], Peng Chen[1], Zongbin Li[1]
[1]*Xi'an Jiaotong University, China*
[2]*Hebei University of Science and Technology, China*

p.123 **Cold Nosing Process Modeling and Simulation for Manufacturing of Aluminium Conical Milk Can**
Jinn-Jong Sheu[1], Hsien-Hsiu Su[1]
[1]*National Kaohsiung University of Applied Sciences, Taiwan*

p.123 **A Manufacturing Performance Evaluation Model for Notebook Computer Manufacturers**
Rong-Hwa Huang[1], Chang-Lin Yang[1], Hui-lung Shih[1]
[1]*Fu Jen Catholic University, Taiwan*

p.123 **Noise Identification and Fault Diagnosis for the New Products of the Automobile Gearbox**
Wenli shang[1], Yigong yan[2], Haibo shi[1]
[1]*Shenyang Institute of Automation,Chinese Academy of Science, China*
[2]*Changchun University of Technology, China*

p.123 **Analysis of the Forming Defects of the Trapezoidal Inner-gear Spinning**
Qin-xiang Xia[1], Ling-yan Sun[1], Xiu-quan Cheng[2], Bang-yan Ye[1]
[1]*South China University of Technology, China*
[2]*Guangzhou Civil Aviation College, China*

p.123 **Research on Tool Path Planning for Five-Axis Machining**
Peinan Li[1], Ruifeng Guo[1], Pin Wang[1], Yan Huang[1]
[1]*Shenyang Institute of Computing Technology, Chinese Academy of Sciences, China*

p.124 **Stock Index Prediction: A Comparison of MARS, BPN and SVR in an Emerging Market**
Chi-Jie Lu[1], Chih-Hsiang Chang[2], Chien-Yu Chen[1], Chih-Chou Chiu[2], Tian-Shyug Lee[3]
[1]*Ching Yun University, Taiwan*
[2]*National Taipei University of Technology, Taiwan*
[3]*Fu Jen Catholic University, Taiwan*

p.124 **A New GA-based RBF Neural Network with Optimal Selection Clustering Algorithm for SINS Fault Diagnosis**
Zhide Liu[1], Jiabin Chen[1], Yongqiang Han[1], Chunlei Song[1]
[1]*Beijing Institute of Technology, China*

p.124 **A Smart Model for Urban Ticketing Based on RFID Applications**
Maria Grazia Gnoni[1], Alessandra Rollo[1], Piergiuseppe Tundo[1]
[1]*Dept. of Engineering for Innovation/University of salento, Italy*

p.124 **Applying Fuzzy Ruled Based to Flexible Routing Problem in a Flexible Manufacturing System**
Iraj Mahdavi[1], Amirhosein Fekri Moghaddam Azar[1], Morteza Bagherpour[2]
[1]*Mazandaran University of Science and Technology, Iran*
[2]*Islamic Azad University of Shiraz, Iran*

p.124 **A Multi-Agent and Extremal Optimization System for "Steelmaking-Continuous Casting-Hot Strip Mill" Integrated Scheduling**
Rigeng Ji[1], Yong-Zai Lu[1]
[1]*Zhejiang University, China*

p.124 **Forecasting Stock Price Using Nonlinear Independent Component Analysis and Support Vector Regression**
Chi-Jie Lu[1], Jui-Yu Wu[2], Cheng-Ruei Fan[3], Chih-Chou Chiu[3]
[1]*Ching Yun University, Taiwan*
[2]*Lunghwa University of Science and Technology, Taiwan*
[3]*National Taipei University of Technology, Taiwan*

p.124 **Estimating the Inquiring Time Interval for the Patent Analysis by the Technology Obsolescence Cycle**
Hsiao-Chung Wu[1], Hung-Yi Chen[1]
[1]*Chaoyang University of Technology, Taiwan*

p.124 **Demonstration Study on Small and Medium High-tech Enterprises Growth: The Case of Dalian**
Lin Li[1], Pengfei Zhou[2], Yan Wang[1]
[1]*Dalian Jiaotong University, China*
[2]*Dalian University of Technology, China*

p.125 **The Antecedents and Consequences of Customer Knowledge Development in New Product Development**
Yen-Tsung Huang[1], I-Chun Chen[1]
[1]*Tunghai University, Taiwan*

p.125 **Computer-aided Classification of Patents Oriented to TRIZ**
Yanhong Liang[1], Runhua Tan[1], Chaoyang Wang[2], Zhi-Guang Li[1]
[1]*Hebei University of Technology, China*
[2]*Hebei Polytechnic University, China*

p.125 **Constructing Model of Organizational Internal Knowledge Integration Based on Cultural Algorithm**
Sihua chen[1], Changqi tao[1], Wei he[1]
[1]*JiangXi University of Finance And Economics, China*

p.125 **The Empirical Study on the Creation of Corporate Intellectual Capital from the Perspective of Social Capital**
Jun-yi Ren[1]
[1]*Yantai University, China*

p.125 **International Comparison on the Coordination Degree Between Economic Development and BERD Investment**
Haifeng Wang[1], Yafei Luo[1]
[1]*Beijing University of Technology, China*

p.125 **A New Classification Method on the Basis of a Patent-Science Relationship**
Yan-Ru Li[1], Tzu-Ying Li[1]
[1]*University of Aletheia, Taiwan*

p.125 **Research on Parameter Transferring Complexity of Assembly Variant Design**
Xinsheng Xu[1], Xin Cheng[1], Zhengxiang Li[2]
[1]*China Jiliang University, China*
[2]*Zhejiang University, China*

p.125 **Customer-Oriented Library Services for Chinese Higher Education**
Jiahui Jiang[1], Yongbing Zhang[2]
[1]*Library of Southwestern University of Finance and Economics, China*
[2]*University of Tsukuba, Japan*

p.126 **An Ubiquitous Infrastructure Applications to Support Museum's Service**
Chen-Wo Kuo[1], Johannes K. Chiang[1]
[1]*National Chengchi University, Taiwan*

p.126 **The Valuation of Money-Back Guarantees in Retailing Markets: A Real Option Approach**
Lieh-Ming Luo[1], Hui-Tzu Lee[2], Yu-Ping Hsieh[3]
[1]*Fu Jen Catholic University, Taiwan*
[2]*National Chung Hsing University, Taiwan*
[3]*Chihlee Institute of Technology, Taiwan*

p.126 **Research on the Service-oriented Manufacturing Model**
Na Gao[1], Songzheng Zhao[1], Xiaodi Zhang[1]
[1]*Northwestern Polytechnical University, China*

p.126 **Reachability Analysis of Service Process Model Based on Polychromatic Sets**
Xinqin Gao[1], Yan Li[1], Mingshun Yang[1], Qilong Yuan[1]
[1]*Xi'an University of Technology, China*

p.126 **Safety Feasibility Analysis on the Liquid Organic Heat Transfer Material Heater Used in the Production Process of Bleaching Powder Concentrate**
Hui Cui[1], Zhisheng Xu[1], Wenhua Song[2]
[1]*Central South University, China*
[2]*Tianjin University of Technology, China*

p.126 **Stochastic Analysis on Probability of Fire Scenarios in Risk Assessment to Occupant Evacuation**
Guanquan Chu[1], Jinhui Wang[2]
[1]*Waterborne Transportation Institute, Ministry of Transport, China*
[2]*Shanghai Maritime University, China*

p.126 **The Characteristics of Temperature Near the Ceiling of Liquid Fires in Vertical Laminar Clean Room Environments**
Yan Huo[1], Ye Gao[1], Hong Mei Wu[1], Jian He Zhao[1]
[1]*Harbin Engineering University, China*

p.126 **Large Eddy Simulation of Smoke Movement in a Teaching Building**
Jian He Zhao[1], Ye Gao[1], Hong Mei Wu[1], Yan Huo[1]
[1]*Harbin Engineering University, China*

p.127 **Study on the Assessment Method of Agroecosystem Health Based on the Pressure-State-Response Model**
Bo Li[1], H. L. Xie[2], H. H. Guo[1], Ying Hou[1]
[1]*Beijing Normal University, China*
[2]*Jiangxi University of Finance & Economics, China*

p.127 **Modeling and Analyzing Safety-critical Parallel-series System Safety**
Qing Sun[1], Lirong Cui[1], Rong Pan[2]
[1]*Beijing Institute of Technology, China*
[2]*Arizona State University, United States*

p.127 **Integrating Socio-technological Factors Analysis Into Nuclear Power Plant Event Report and Safety Evaluation: A Systematic Framework**
Ziqing Zhai[1]
[1]*Shanghai Jiao Tong University, China*

p.127 **Comparsion the Maintenance Between Two-Unit Parallel Standby Systems and 2-out-of-3 Standby Systems**
Min Wang[1]
[1]*Chaoyang University of Technology, Taiwan*

p.127 **Risk Analysis of the City Gas Pipeline Network Based on the Fault Tree**
Yi-lin Yin[1], Guang-li Lin[1]
[1]*Tianjin University, China*

p.127 **The Empirically Comparative Analysis of Advanced Manufacturing Paradigm of Chinese, Japanese and South Korean Enterprises**
Jun-yi Ren[1]
[1]*Yantai University, China*

p.127 **Maintenance Behavior-Based Prediction System Using Data Mining**
Pedro Bastos[1], Rui Lopes[1], Luis Pires[1], Tiago Pedrosa[1]
[1]*Instituto Politécnico de Bragança, Portugal*

p.127 **Concept Analysis for Service Oriented Manufacturing Based on Interpretive Structural Modeling**
Yi-song(Lydia) Zheng[1], Dong Li[1], Feng Zhao[1]
[1]*Nankai University, China*

IEEM 2009
8 to 11 December, Hong Kong

IEEE
Celebrating 125 Years
of Engineering the Future

MAINTENANCE BEHAVIOUR-BASED PREDICTION SYSTEM USING DATA MINING

Pedro Bastos, Rui Lopes, Luís Pires, Tiago Pedrosa,
Instituto Politécnico de Bragança, Campus de Santa Apolónia, Apartado 1038 - 5301-854 Bragança- Portugal
(bastos@ipb.pt, rlopes@ipb.pt, luica@ipb.pt, pedrosa@ipb.pt)

In the last years we have assisted to several and deep changes in industrial manufacturing. Induced by the need of increasing efficiency, bigger flexibility, better quality and lower costs, it became more complex. The complexity of this new scenario has caused big pressure under enterprises production systems and consequently in its maintenance systems. Manufacturing systems recognize high level costs due equipment breakdown, motivated by the time spent to repair, which corresponds to no production time and scrapyard, and also money spent in repair actions. Usually, enterprises do not share data produced from their maintenance interventions. This investigation intends to create an organizational architecture that integrates data produced in factories on their activities of reactive, predictive and preventive maintenance. The main idea is to develop a decentralized predictive maintenance system based on data mining concepts. Predicting the possibility of breakdowns with bigger accuracy will increase systems reliability.

SYSTEM FUNCIONALITY

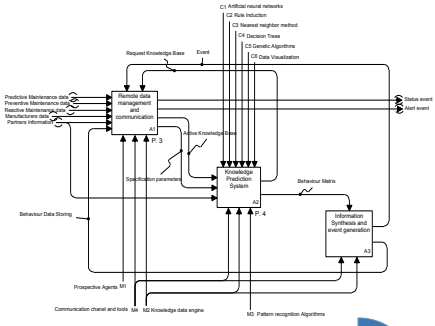

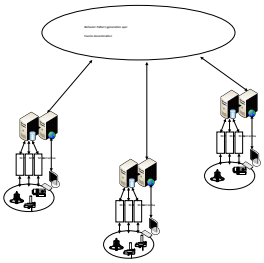

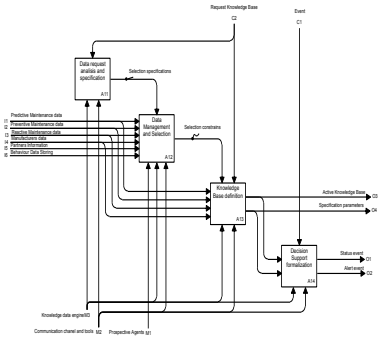

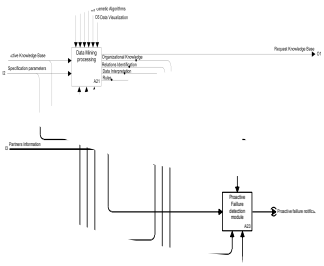

Pressure/support factors

- ▶ Globalization, new markets coming in sight
- ▶ Bigger exigency in products quality
- ▶ Development and incorporation of information and communication technologies
- ▶ Products life cycle and time to market decreasing
- ▶ Technological changes and products bigger complexity.
- ▶ Mass Customization

Perspectives

- Maintenance function is seen to the enterprise as a cost;
- Maintenance function, seen as a one, became more and more requested to contribute to cost reduction, based on bigger and consistent equipment reliability
- Manufacturing systems recognize high level costs due equipment breakdown, related with inspection costs, repair costs as well as costs associated with non production time or equipment non utilization;
- Enterprises need to cope with market expectations, incorporating in their production philosophies new paradigms such as JIT- Just in time, MTO- Make to order, Mass Customization, Agile or Lean manufacturing.

Motivation/Objectives

- In literature there are some approaches that use data mining concepts to improve manufacturing activities.
- It isn' t so common to find approaches that use it to improve the capacity of predicting behaviors based on historical data.
- In fact, if the case is the possibility of a distributed collaboration of independent enterprises sharing data between them, even if they are competitors, the examples are even reduced.
- Create a system that will help enterprises to collect, extract and create knowledge in a way that enterprises will predict with more accuracy the moment to realize maintenance actions and thus improve the productivity of manufacturing process.